United Strapping Tools

Read all safety instructions and information regarding operation of this product before proceeding

PARTS AND SAFETY MANUAL
UST 1200/1205

TOOL SPECIFICATIONS

TOOL NUMBER	TENSION	WIDTH	THICKNESS
UST 1200	1600lbs (725kg)	3/4-1 1/4” (19mm-32mm)	0.020” - 0.044” (0.51mm-1.12mm)
UST 1205	1600lbs (725kg)	2” (51mm)	0.044” (1.12mm)

PLEASE NOTE:
READ ALL WARNINGS BEFORE OPERATING THIS PRODUCT

WARNING!

READ THESE UNITED STRAPPING TOOLS (UST) INSTRUCTIONS CAREFULLY. FAILURE TO FOLLOW THESE CAN RESULT IN SEVERE PERSONAL INJURY.

STRAP BREAKAGE HAZARD
Improper operation of the tool or sharp corners on the load can result in strap breakage during tensioning, which could result in the following:

- **A sudden loss of balance causing you to fall.**
- **Both tool and strap flying violently towards your face.**

Failure to place the strap properly around the load or an unstable or shifted load could result in a sudden loss of strap tension during tensioning. This could result in a sudden loss of balance causing you to fall.

Read the tool's operating instructions. If the load corners are sharp use edge protectors. Place the strap correctly around a properly positioned load.

Positioning yourself in-line with the strap, during tensioning and sealing, can result in severe personal injury from flying strap or tool. When tensioning or sealing, position yourself to one side of the strap and keep all bystanders away.

TRAINING
This tool must not be used by persons not properly trained in its use. Be certain that you receive proper training from your employer. If you have any questions, contact your UST Representative.

EYE INJURY HAZARD
Failure to wear safety glasses with side shields can result in severe eye injury or blindness. Always wear safety glasses with side shields which conform to ANSI Standard Z87.1 or EN 166.

FALL HAZARD
Maintaining improper footing and/or balance when operating the tools can you to fall. Do not use the tool when you are in an awkward position.

CUT HAZARD
Handling strap or sharp parts could result in cut hands or fingers. Wear protective gloves.

TOOL CARE
Take good care of the tool. Inspect and clean it daily, lubricate it weekly and adjust when necessary. Replace any worn or broken parts.

WORK AREA
Keep work areas uncluttered and well lighted.

OPERATING SEQUENCE
Use the correct UST products for your application. If you need help contact your UST Representative. Before using this pneumatic tool, read the Operation and Safety Instructions contained in this manual.

CLEANING & LUBRICATION
Clean and apply light weight machine oil to all moving parts on a weekly basis. Refer to the pneumatic information shown in this manual for lubricant recommendations or contact your UST Representative for any questions regarding the air motor.

OPERATING INSTRUCTIONS

1. Thread the strap through the seal. Continue to encircle the item to be strapped and thread the lead end back through the seal as shown. Sharply bend approximately 2 1/2" (64 mm) of the strap end back under the seal. Pull the slack out of the strap.

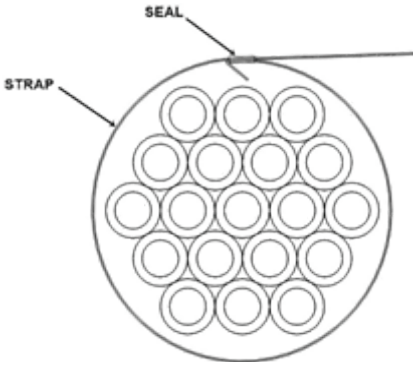

- **For 3/4" straps, use #34HOC seals.**
- **For 1-1/4" straps, use #114P seals.**
- **For 2" straps, use #250P seals.**

2. Press the gripper lever labeled "A" with the right hand. Place the top strap into the front nose opening and slide the tool forward into it contacts the seal.

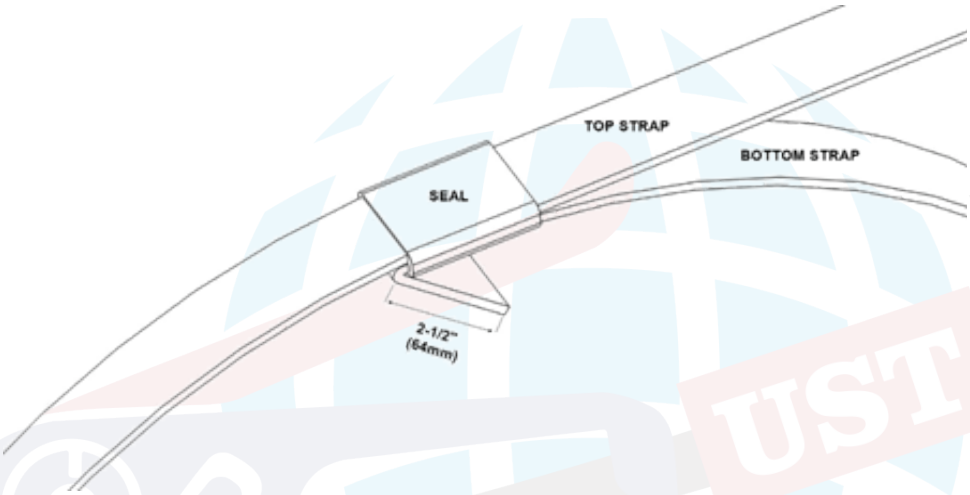

3. While standing to one side of the strap, release the gripper and turn the air control ring in the direction of the arrow with the palm of the hand. The tool will automatically tension the strap to its max tension and hold it tight.

4. Notch or crimp the seal with a sealing tool. After sealing, inspect to ensure that the sealing tool has properly formed the joint.

5. Before shutting off the air, break the strap by swinging the tensioner up and down. DO NOT EXCEED 90°. If the tool is swung too far forward, the seal will be damaged, and the strap will break off.

WARNING!

Wear safety glasses. Stand to one side of the strap while tensioning.

Make sure all bystanders are clear before proceeding.

Apply tensions that are proper for the size and type of strap being used and is compatible with the loads being strapped.

Tuck the cut strap back into the dispenser when not in use to prevent accidents.

PNEUMATIC INFORMATION

AIR SUPPLY INSTALLATION

If the compressor has a good dryer unit, use black pickled pipe. If a dryer unit is not available, use galvanized or copper pipes.

To perform reliably, a pneumatic tool requires a source of continuous, clean, water-free air at an adequate pressure.

A filter-regulator-lubricator unit (P/N 173111) must be installed as close to the air tool as possible, preferably within 10 feet (3M). It should be placed in a convenient location where it can be easily drained, adjusted and filled with oil. The air hose must have at least a 3/8" (9.5 mm) I.D. A quick-connect press-on socket is installed on the stress spring end of the hose for convenient hookup to the air tool.

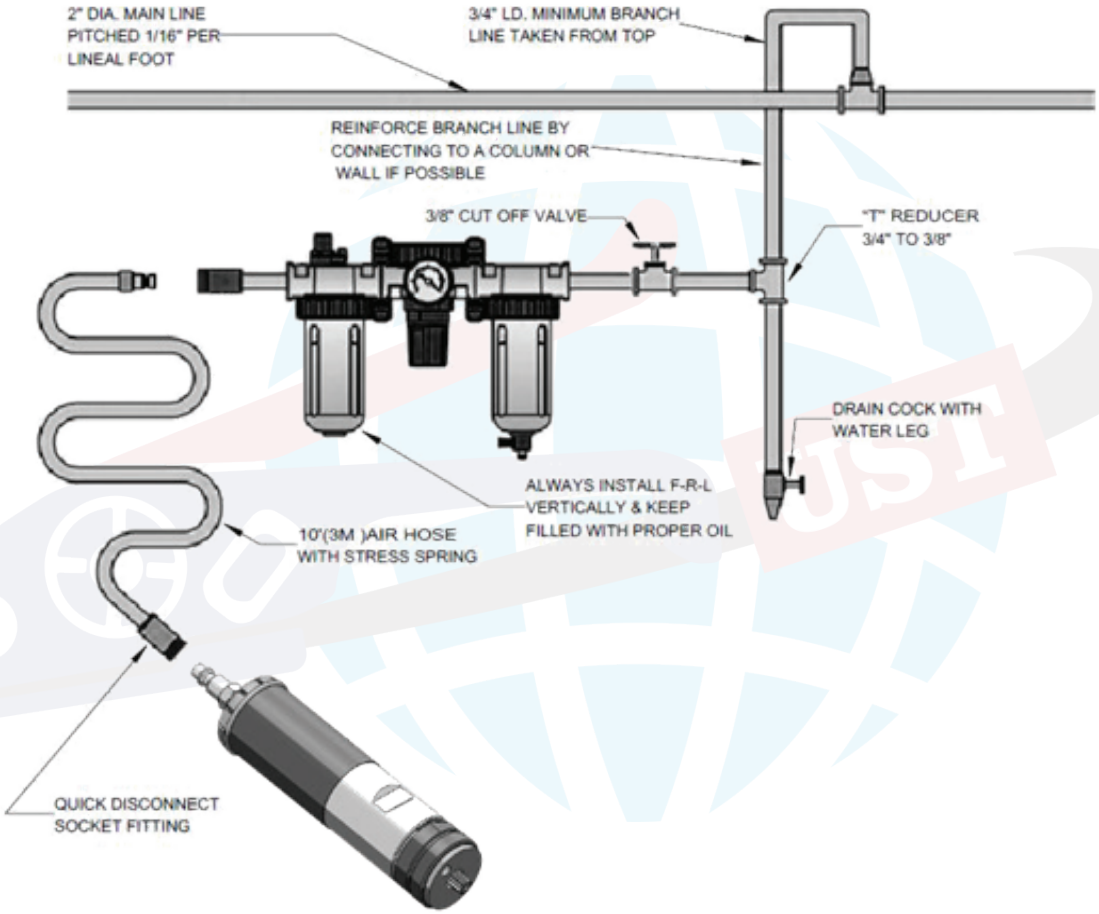

Do not install where bowls may be exposed to materials incompatible with polycarbonate. Certain oils, chemicals and fumes can weaken these bowls and cause them to burst. Clean only with warm water.

WARNING!

Never operate this tool using a bottled air or gas source.

Bottled air/gas sources do not provide a consistent operating pressure and could result in air pressures that exceed the maximum allowable pressure for this tool.

MOISTURE
Steps must be taken to remove water from air lines and keep it from reaching the tool. Moisture will cause corrosion, wash away lubricants and failure of internal parts.

The main line should be pitched so the far end terminates in the water leg. Branch lines are taken from the top of the main, never off the bottom. Ever branch should have a water leg at its lowest point, with a drain that is drained daily.

If these precautions are taken and water is present, an after cooler and a moisture separator are required between the compressor and air tank. A large air line separator can be installed in the air tool line.

Water in air lines is a constant threat to the proper operation of the tools. Even near freezing conditions, a good refrigerant type dryer is essential. A good dryer will remove 95% or more of the water at the compressor. The remaining moisture is removed at the water leg.

LUBRICATION
The air motor must be lubricated to ensure optimal operating conditions. This is achieved by keeping the air line lubricator filled with oil and correctly adjusted. Without proper lubrication, the motor will become sticky and result in a lower tension force and be difficult to operate.

Install the lubricator as close to the air tool as possible. For proper operation, oil must drop through the lubricator sight glass at a rate of 4 to 10 drops per minute. Only 20% of this oil is delivered to the tool. The rest of the oil goes back to the oil reservoir. If an adjustment is required, the adjusting screw on top of the lubricator may be turned as marked to reduce or increase the flow of oil.

The correct grade of oil must be used in the lubricator. If the oil is too heavy, not enough lubrication will be delivered and will cause sluggish operation of the tool.

Recommended oils are any good grade of rust and oxidation inhibiting oil with a viscosity of 80-120 S.U.S at 100 degrees Fahrenheit.
(0.15 to 0.25 cm^2/sec at 38 degrees Celsius)

Several drops of lubricator oil added to the inlet of the air motor or into the air line each day will help insure good operation of the tool. A noticeable reduction of air motor performance can usually be corrected by squirting a few drops of oil into the air line.

COLD WEATHER OPERATION

If a tool does not operate satisfactorily in freezing temperatures, certain steps can be done to correct the problem. The following steps can be taken to improve the cold weather condition operation of the tool:

- **An air line dryer adjacent to the compressor.**
- **Using the correct lubricant. Using anti-freeze for air tools does not work well. The best lubricant for freezing conditions is a 1 to 1 oil and kerosene combination.**
- **Run the air supply line to an indoor located Filter-Regulator-Lubricator or relocate the F-L-R to a warmer operating area.**

Air pressure is assumed to be 90 psig with the recommended size and length of the air hose. Volume of air at room temperature and sea level pressure, or "free air" conditions.

AIR LINE PRECAUTIONS
Strap tension is controlled by air pressure. Minimum air pressure is 50 psig with the maximum pressure at 90 psig. Use the proper air line piping and lubrication as specified in this manual. Your air pressure gauge must be accurate and be confirmed of its accuracy by comparing it to a calibrated master gauge.

PARTS LIST, UST-1200, UST-1205

ITEM	QTY.	PART NO.	DESCRIPTION	ITEM	QTY.	PART NO.	DESCRIPTION
1	1	28.423511	Gear Housing	13	1	28.423524	Roller Pin, Ø10mm x 50mm
2	1	28.267596	Warning Sign	14	1	28.252262	Nose Pin, Ø8mm x 36mm
3	1	28.423548	Foot Spring	15	1	28.423546	Nose Spring
4	1	28.427295	SHSS, M6 x 25 Flat Point	16	1	28.800602	Breaker Nose
5	1	28.162391	Pin, Ø5mm x 24mm	17	1	28.423517	Backup Roller
6	1	28.423537	Name Plate UST 1200	18	1	28.423398	Feedwheel
	1	28.510462	Name Plate UST 1205	19	1	28.423505	Side Plate
7	1	28.423518	Flange Bushing	20	1	28.423521	Bushing
8	1	28.423514	Breaker Foot	21	2	28.423790	SHCS, M6 x 25
9	1	28.423532	Handle	22	1	28.1344	Protection Sign
10	4	28.005464	Lock Washer, M6	23	1	28.1346	Warning Sign
11	2	28.423549	SHCS, M6 x 18	24	1	28.1348	Danger Sign
12	1	28.423516	Pivot Pin, Ø10mm x 60mm				

NOTE:

- Parts that are shaded are wearing parts.
- Fore items (screws) 4 and 21, apply one drop of Loctite 242 (blue) sealant to cleaned parts. Allow 12 hours to cure if possible.
- For item (screw) 11, apply one drop of Loctite 241 (red) sealant to cleaned parts. Allow for 12 hours to cure if possible.
- Feedwheel (18) and roller (17) should not come together.

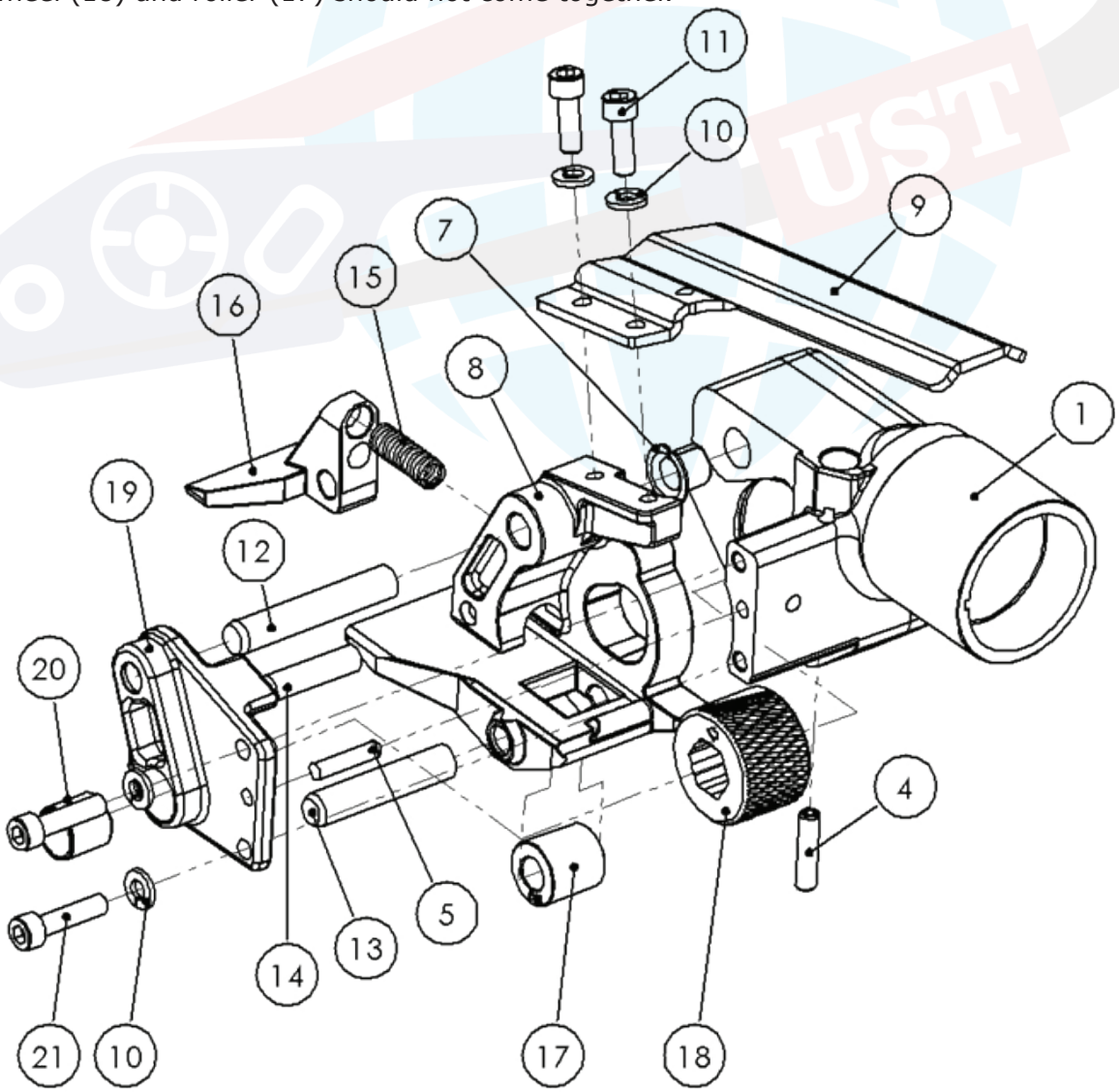

PARTS LIST, GEAR HOUSING ASSEMBLY (28423520)

ITEM	QTY.	PART NO.	DESCRIPTION	ITEM	QTY.	PART NO.	DESCRIPTION
1	1	28.423511	Gear Housing	28	1	28.423530	Worm
19	1	28.024038	Bearing	29	1	28.008774	Key
20	1	28.423533	Thrust Washer	30	1	28.008756	Bearing
21	1	28.423529	Worm Gear	31	1	28.306389	Idler Gear Plate Assy
22	1	28.423501	Feedwheel Shaft	32	3	28.008766	Idler Gear
23	1	28.423515	Bearing	33	1	28.423402	Ring Gear
24	1	28.423531	O-ring, SAE 18	34	1	28.008781	Thrust Washer
25	1	28.423509	Cover	35	1	28.008751	Needle Bearing
26	1	28.256755	O-ring, SAE 30	36	1	28.008752	Truarc Ring, N5000-62
27	1	28.250731	Truarc Ring, N5000-185	37	1	28.423510	Air Motor 100L15

NOTE:

- Pack the gear housing (1) about 1/3 full with non-fluid oil.
- Bearing must be installed with wide shoulder away from worm gear (21).

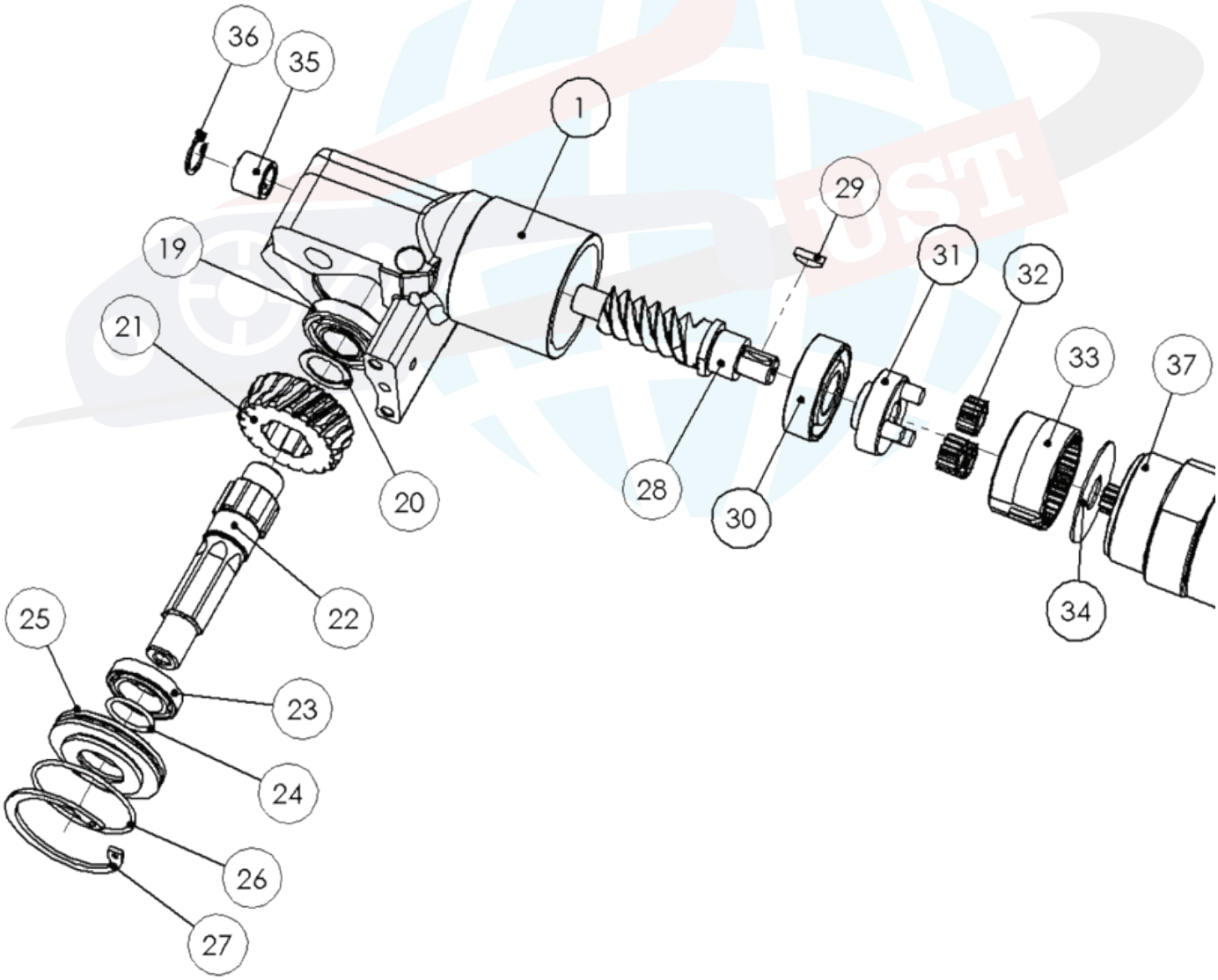

PARTS LIST, AIR MOTOR ASSEMBLY (423510)

ITEM	QTY.	PART NO.	DESCRIPTION	ITEM	QTY.	PART NO.	DESCRIPTION
38	1	28.423508	Motor Housing	53	1	28.423423	Rotor
39	1	28.004164	O-ring, SAE 011	54	5	28.024651	Vane
40	1	28.024663	Valve Sleeve	55	1	28.024602	Spacer
41	1	28.023549	Retainer	56	1	28.023510	Align Pin
42	1	28.024662	Valve Stem	57	1	28.423794	Front End Plate
43	1	28.023559	O-ring, SAE 009	58	1	28.023481	Ball Bearing
44	1	28.024661	Valve Spring	59	2	28.090004	Bevel Spring Washer
45	1	28.023372	Roll Pin, 3/16 x 3/8	60	1	28.423404	Spacer
46	1	28.024676	Valve Collar	61	3	28.423060	Idler
47	1	28.023557	Retainer, Spirolox	62	1	28.423403	Idler Carrier Assy
48	1	28.024631	Filter Assy	63	1	28.423798	Ring Gear
49	1	28.423534	Deflector Assy	64	1	28.023547	Ball Bearing
50	1	28.024633	Bearing	65	1	28.023558	Seal
51	1	28.024653	Back End Plate	66	1	28.306612	Needle Roller
52	1	28.024652	Cylinder	67	1	28.423394	Gear Housing

NOTE:

- Idler gears (61) are to be lubricated with non-fluid oil. Vanes (54) must soak in air line oil overnight before assembling air motor.
- If the rear motor housing (38) becomes loose, it must be tightened while the motor is running at 20-30 psig (1.6-2.0 bar) air pressure. This will ensure proper alignment and rotor freedom.
- Spring washers (59) should be assembled back to back with cup shape facing outwards.

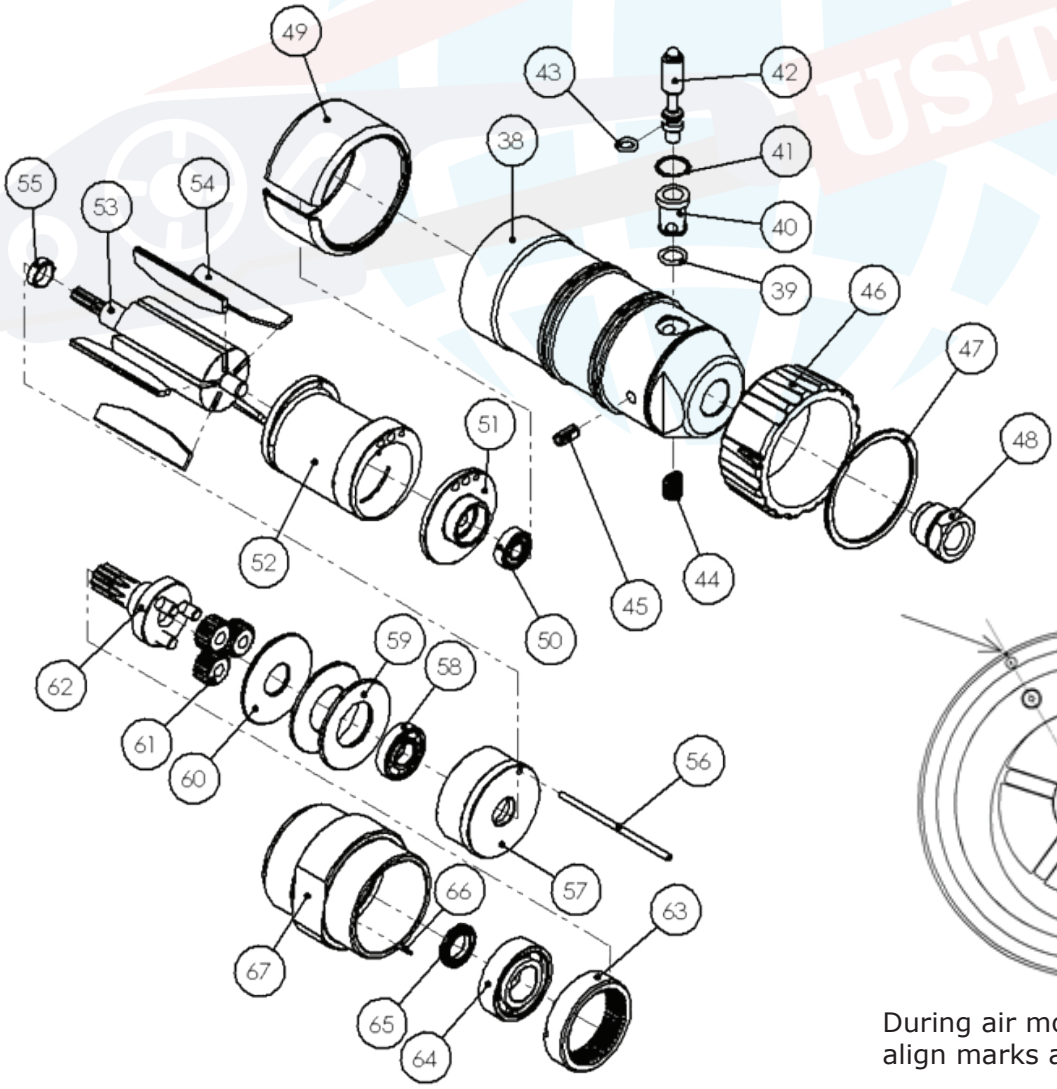

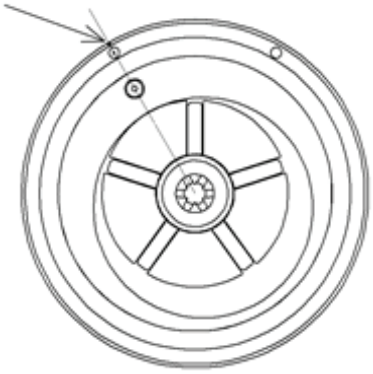

During air motor assembly, align marks as indicated above.

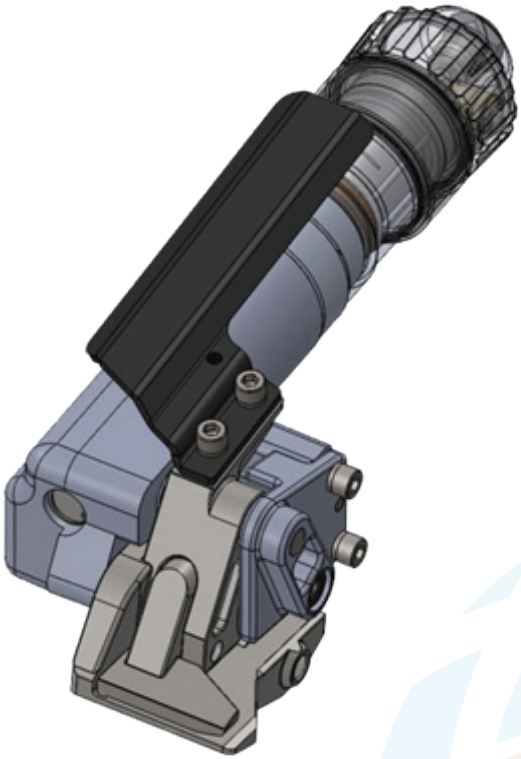

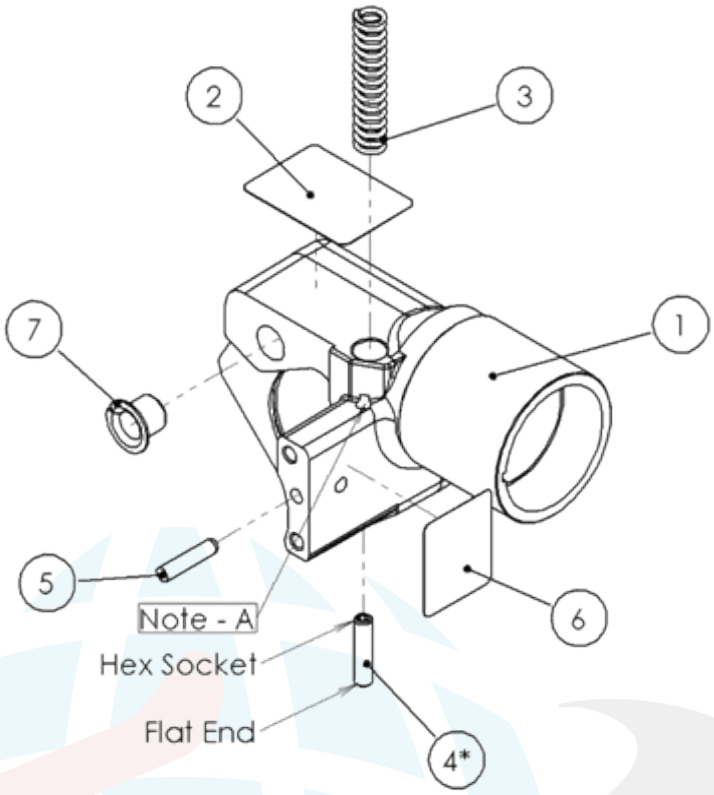

NOTE:

- Allen wrench access hole to set screw for feedwheel to roller clearance adjustment.
- Install feedwheel in noted orientation as shown by the arrows.
- Install roller with the larger diameter (Marked "OUT") facing outwards.

Feedwheel (18) to roller (17) clearance is set by turning the set screw (4) until there is a 0,005" - 0,010" clearance between two parts.

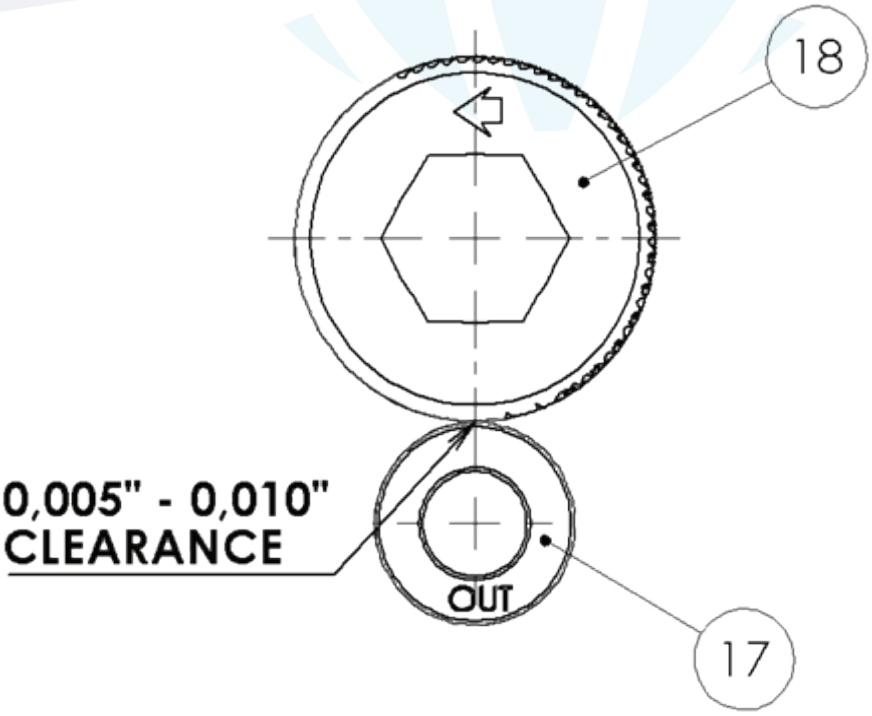

TROUBLESHOOTING

The following items are the most common tool symptoms if problems occur. For symptoms or remedies not shown, contact your UST Representative for additional information and details. The following tool symptoms are shown in this manual:

1. **SYMPTOM: Inadequate strap tension**
2. **SYMPTOM: Feedwheel milling or slipping**
3. **SYMPTOM: Tool is not running at all**

1 SYMPTOM: Inadequate strap tension	
CAUSE	**SOLUTION**
1. Supply air pressure is set incorrectly. 2. Air regulator at tool is set incorrectly. 3. Improper amount of oil in the supply air. 4. Worn or broken air hose. 5. Back up roller restricting strap movement through tool. 6. Deflector assembly (49) may be muffling motor housing exhaust.	1. Make sure that the air pressure is set between 70-90 psig (4.8-6.1 BAR) at the tool. 2. Adjust tension regulator. 3. Check lubricator operation and pour one tablespoon of lubricating oil into tool inlet. 4. Check for restrictions or deterioration of supply hose. 5. Check that the backup roller is free to rotate. 6. Rotate deflector until the opening lines up with motor exhaust.
2 SYMPTOM: Feedwheel milling or slipping	
CAUSE	**SOLUTION**
1. Dirty or clogged feedwheel. 2. Worn or broken feedwheel. 3. Improper feedwheel clearance. 4. Worn feedwheel shaft bearings.	1. Clean feedwheel teeth. 2. Check feedwheel (49). Replace if teeth are broken or blunt. Inspect for proper rotation orientation. 3. Check feedwheel clearance. 4. Check feedwheel shaft outer bearing for extreme elongation. Replace if necessary.
3 SYMPTOM: Tool is not running at all	
CAUSE	**SOLUTION**
1. Supply air pressure is set incorrectly. 2. Deflector assembly (49) may be muffling motor housing exhaust.	1. Make sure that the air pressure is set between 70-90 psig (4.8-6.1 BAR) at the tool. 2. Rotate deflector until the opening lines up with motor exhaust.

SAFE USE

TOOL MAINTENANCE

The most common reason for poor performance of tools and incorrectly formed straps is improper tool maintenance. The easiest way to determine if a tool is performing optimally is by inspecting the strap joint. Maintaining the tool is a task that consists of three parts. First, a quick daily inspection for any worn or broken parts. Second, keep the tool on a service schedule for cleaning and lubricating. Third, when problems occur, use the troubleshooting guide to diagnose and solve and issues before they lead to more serious problems. Each of these three steps have been outlined and further explained below.

TOOL INSPECTION

Visually inspect the exterior of the tool on a daily basis. Fixing and preventing broken or worn parts early on will increase the life span of the tool. Replace any broken or worn parts with new parts. Review the Parts Removal & Adjustments portion of this manual for more details.

SERVICE INTERVALS

This tool can be used with various sizes of strap which can each cause different rates of component wear. All critical moving components of the tool should be inspected at particular intervals, with some components being inspected more than others. Broken or worn parts can decrease sealing strength, which can further lead to component wear and produce lower joint strength.

Inspect the components of the sealing mechanism when:

- **Joint not as shown in this manual or it is detected that the joint is not well formed.**
- **Sealing effort requires higher air pressure, or the tool is difficult to remove from strap.**
- **When the date for inspection has arrived.**

If there is any question that the joint formations are not as shown, it is important to contact your UST Representative immediately.

The feedwheel and wear plug are subject to wearing and chipping. A daily cleaning of these parts is important for the tool to maintain a long life. The first indication of wear will be the strap slipping during tensioning. Sometimes the teeth need to be cleaned with a wire brush, but if slipping is till occurring, the parts may need to be replaced. Using the tool in a dirty environment will increase the feedwheel wear.

Inspect the components of the tensioner mechanism when:

- **Strap slips when being tensioned.**
- **Evidence of the feedwheel milling on the strap surface.**
- **When the date for inspection has arrived.**

Note:

The serial number, located on part 28423511, is required for warranty control or returns

United Strapping Tools

UNITED STRAPPING TOOLS NEW TOOL WARRANTY

United Strapping Tools (UST) warrants that a new UST product will operate per functional specifications for a period of **sixty (60)** days after the date of shipment to the owner's place of business. Normal wearing parts, as outlined in the manual are covered by a **thirty (30)** day warranty unless these parts have been subject to abnormal or extreme usage. Damage claims because of production shutdowns and claims for damage to persons and to property resulting from warranty deficiencies cannot be asserted by the customer.

UST's sole liability will be to replace or repair, without charge, any tool that proves to not operate per functional specifications within the stated period. UST reserves the right to replace any tool which proves not to operate per functional specifications with a new or like-new tool of the same model if in UST judgment. Any new replacement tool provided will carry a **sixty (60)** day warranty. Any warranty repaired tool will carry a warranty for the balance of the time remaining on the initial **sixty (60)** day warranty. The warranty will be extended to compensate for the time the tool is in the possession of UST for warranty repairs.

This warranty will be void to any tool that has been: **(I) subjected to mis-use, misapplication, accident, damage, repaired with non-genuine UST replacement parts; (II) improperly maintained or adjusted, damaged in transit or handling; (III) used with improperly filtered, unlubricated air or improper strapping material; (IV) altered or repaired in a way that affects or detracts from the performance of the tool; (V) removal of the name plate off of the tool;**

The removal, tampering or breaking of the security seal indicated by its blue color on or in select assembly points will indicate tampering of the tool and the warranty will be voided.

The warranty excludes:

- Wearing parts (tension wheels, cutters, punches, dies, notchers, grippers, batteries, motors),
- Deficiencies resulting from improper installing, incorrect handling and maintaining the tool,
- Deficiencies resulting from using the tool without or with defective security or safety devices,
- Disregard of directions in the operation manual,
- Arbitrary modifications of the tool,
- Deficient control of wearing parts,
- Deficient repair works of the too,
- Use of consumable products not recommended by United Strapping Tools.

We reserve the right to modify the product at any time in order to improve its quality.

UST MAKES NO WARRANTY, EXPRESSED OR IMPLIED, RELATING TO MERCHANTABILITY, FITNESS OR OTHERWISE EXCEPT AS STATED ABOVE AND UST'S LIABILITY AS ASSUMED ABOVE IS IN LIEU OF ALL OTHERS ARISING OUT OF OR IN CONNECTION WITH THE USE AND PERFORMANCE OF THE TOOL. IT IS EXPRESSLY UNDERSTOOD THAT UST SHALL IN NO EVENT BE LIABLE FOR ANY INDIRECT OR CONSEQUENTIAL DAMAGES INCLUDING, BUT NOT LIMITED TO, DAMAGES WHICH MAY ARISE FROM LOSS OF ANTICIPATED PROFITS OR PRODUCTION, SPOILAGE OF MATERIALS, INCREASED COSTS OF OPERATION OR OTHERWISE.

The information contained in these documents is confidential, privileged and only for the information of the intended recipient and may not be used, published, modified, or redistributed without the prior written consent of United Strapping Tools.

The customer has the right to examine the products for a span of 15 business days following their delivery. If any products are found not to meet the sale specifications during this Inspection Period, the customer must bring this to UST's attention in writing and allow UST a reasonable chance to inspect these products and rectify any issues. Should the customer neglect to submit such written notice within the Inspection Period, it will be considered that the customer has accepted the products. The customer is prohibited from returning any product without obtaining prior written consent from UST. UST will not accept the return of products that have been used. All costs linked with the return of products, including any potential loss, will fall to the customer, unless UST either stipulates differently in writing or determines that the products are not in accordance with the agreed terms of sale.